Filtramag+ Ultimate Filtration Technology

ECLIPSE MAGNETICS

MONTFORT INTERNATIONAL

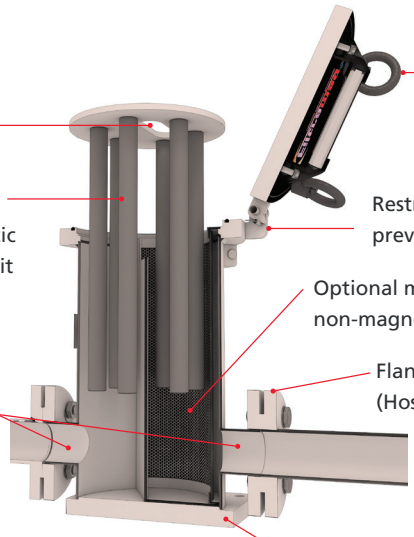

Robust high performance magnetic filter with Dual Flow Technology to maximize collection capability. Easy installation with operation up to 290 psi (20 bar).

High Intensity Magnetic Filter

Filtramag+ is a high performance magnetic filter with full Stainless Steel construction which makes it suitable for use in a variety of industry sectors and applications.

Dual Flow Techology™

Filtramag+ is the most efficient filter of its type. The dual chambered design means that fluid is exposed to the high intensity magnets for the maximum time thus ensuring almost 100% of contamination is removed on first pass through the filter. The patented magnetic circuit on the 4,000 gauss version design ensures that the filter can never block even in high contamination applications.

Magnetic Core Options

High intensity magnetic cores ensure particle filtration down to sub-micron size. For standard machining or wash system applications a 4,000 gauss magnetic core pack is available. For applications which involve lower magnetically permeable materials e.g. Cast Iron and Carbide or require an ultra-precise surface finish an 11,000 gauss magnetic core pack is available.

Benefits

Using fully filtered fluids, free from ferrous particles provides:

- Improved surface finish
- Cost savings on disposable filtration media
- Extended fluid lifespan
- Reductions in waste disposal
- Longer lasting tools and machinery

Typical Applications

- With Carbide or Cast Iron materials
- General machining operations
- Inks/paints
- Wash systems
- Diesel/gasoline
- Slurry/glazes

Installation Location

Pre & post fluid holding tank, machine or process

MONTFORT INTERNATIONAL ltd
2500 avenue Watt, Québec (QUÉBEC) Canada G1P 3T3
+ 1 (418) 877-0778 - (800) 463-6668 - info@montfort-international.co

Technical Data

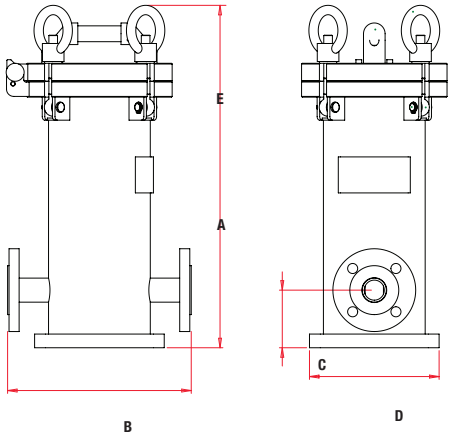

Product number	Max. flow rate	Max. operating pressure	Connection	Dimensions inches					Magnetic strength
	gallons/min.	psi	ANSI"	A	B	C	D	E	gauss
FM1.5+/ANSI	66	290	1½ "	15.5	10.0	3.9	7.1	3.2	4,000
FM2.0+/ANSI	132	290	2"	17.1	13.0	3.9	9.8	3.2	4,000
FM1.5+/ANSI/11K	66	290	1½ "	15.5	10.0	3.9	7.1	3.2	11,000
FM2.0+/ANSI/11K	132	290	2"	17.1	13.0	3.9	9.8	3.2	11,000
METRIC	ltrs/min.	bar	ANSI"	mm					gauss
FM1.5+/ANSI	250	20	1½ "	395	255	100	180	80.5	4,000
FM2.0+/ANSI	500	20	2"	442	330	100	250	80.5	4,000
FM1.5+/ANSI/11K	250	20	1½ "	395	255	100	180	80.5	11,000
FM2.0+/ANSI/11K	500	20	2"	442	330	100	250	80.5	11,000

Spare Part Numbers

Product number	Description
FM1.5+/MC	4,000 magnet cartridge for FM1.5+/ANSI units
FM2.0+/MC	4,000 magnet cartridge for FM2.0+/ANSI units
FM1.5+/MC11K	11,000 magnet cartridge for FM1.5+/ANSI units
FM2.0+/MC11K	11,000 magnet cartridge for FM2.0+/ANSI units
FM2.0+/MB0.5	Optional 0.5mm / 0.02in mesh basket for FM2.0+/ANSI units
FM2.0+/MB1.0	Optional 1.0mm / 0.04in mesh basket for FM2.0+/ANSI units
FM1.5+/VS	Spare Viton seal for FM1.5+/ANSI units
FM2.0+/VS	Spare Viton seal for FM2.0+/ANSI units

Performance

Magnetic Performance	Standard Option 4,000 gauss High Intensity Option 11,000 gauss
Magnetic Material	Rare Earth Neodymium Iron Boron
Magnet Grade	N35 (Standard Option), N45 (High Intensity Option)

Materials

Housing	304 Grade Stainless Steel
Lid	304 Grade Stainless Steel
Magnetic Core	316 Grade Stainless Steel
Surface Finish	External-powder coated
Sealing	Viton O-ring
Mesh Strainer	304 Grade Stainless Steel
Options (FM2.0+/ANSI only)	0.02in & 0.04in aperture size
Swing Bolts	High Tensile Steel
Cleaning Tool	Stainless Steel

MONTFORT INTERNATIONAL ltd
2500 avenue Watt, Québec (QUÉBEC) Canada G1P 3T3
+ 1 (418) 877-0778 - (800) 463-6668 - info@montfort-international.co