Magnetic Lifting & Handling Systems

MONTFORT INTERNATIONAL

Safe & efficient handling for manufacturing and assembly lines.

ECLIPSE MAGNETICS

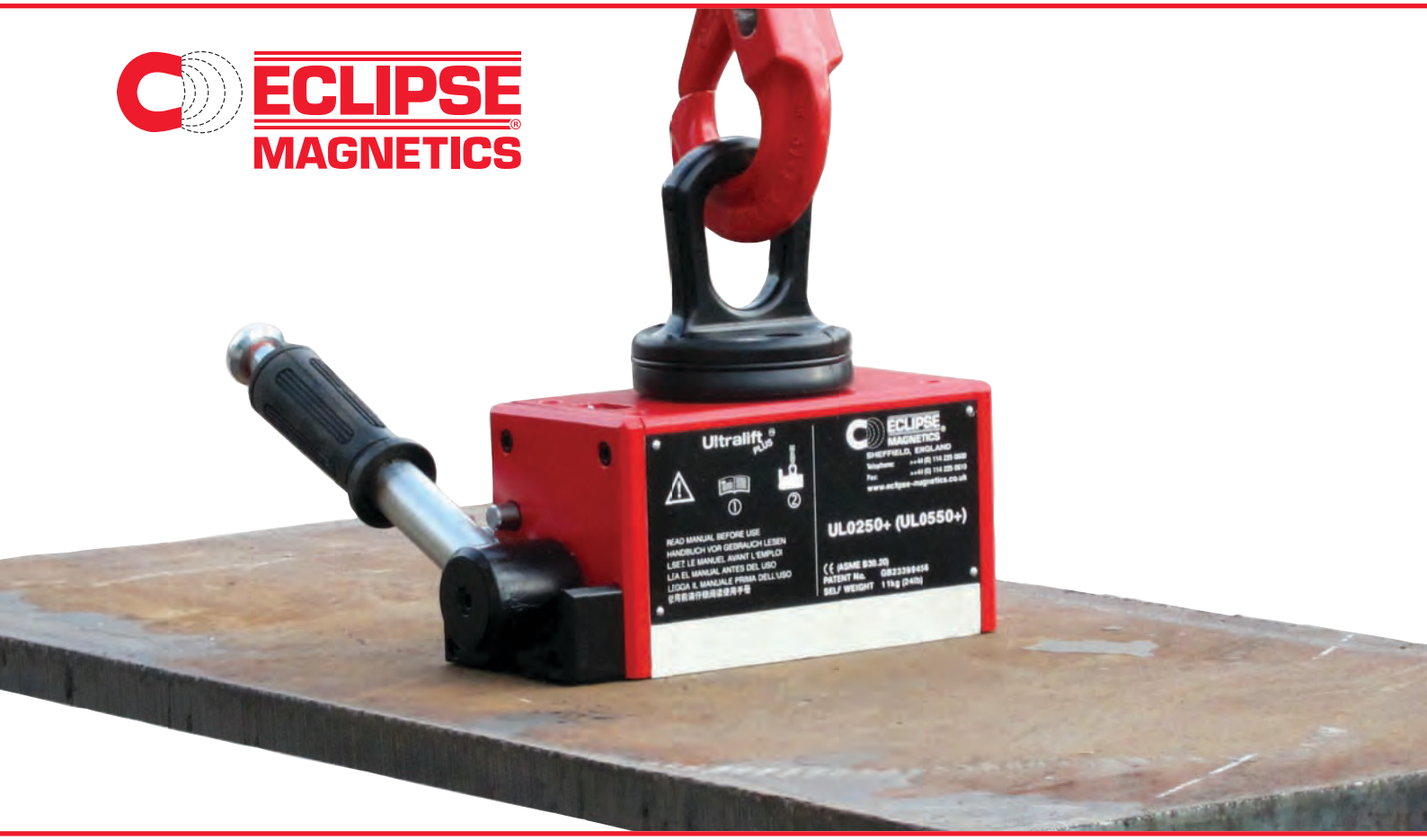

MONTFORT INTERNATIONAL ltd
2500 avenue Watt, Québec (QUÉBEC) Canada G1P 3T3
+ 1 (418) 877-0778 - (800) 463-6668 - info@montfort-international.com

ECLIPSE MAGNETICS

The safest, most efficient way to move ferrous loads

MONTFORT INTERNATIONAL ltd
2500 avenue Watt, Québec (QUÉBEC) Canada G1P 3T3
+ 1 (418) 877-0778 - (800) 463-6668 - info@montfort-international.com

Eclipse Magnetics

100 years of manufacturing excellence

Serving some of the leading names in industry

JCB

Caterpillar

Corus

TATA Steels

NSK

BMW

Ford

Perkins

Fanuc

ABB Robotics

Yaskawa

A world leader in magnetic technology

With 100 years of experience in the design and manufacture of high performance magnetic systems, we supply critical equipment to some of the leading names in the most demanding industries. Our magnetic technology is widely used in major development projects worldwide, all requiring a guarantee of premium performance.

Designing excellence

We have a track record of producing high quality products backed by a commitment to total customer service. Our technical application teams have a wealth of experience, ensuring that many of our products are market leading innovations. All manufacturing is carried out using ISO 9001 certified quality management systems. We are also fully conversant with specific industry certifications.

Unrivalled product range

We serve worldwide markets with extensive magnetic product ranges including:- handling systems, magnetic filtration, foreign body removal systems, magnet assemblies and complex magnetic industrial equipment used in industries such as automotive, aerospace and nuclear. Many of our products are unique and covered by global patents.

Worldwide support

We offer worldwide support through our offices in the UK, Canada and China. We also have numerous employees in various territories and a network of technically trained partners to provide local product support.

Improve your process efficiency

Ultimate speed & efficiency combined with total safety

Eclipse Magnetics' lifting and handling systems are based on fail-safe magnetic technology which delivers world class results. Ideal for applications ranging from light pick and place equipment to heavy steel stock movement, magnetic lifting is the most efficient solution for handling ferrous loads.

In comparison to other methods such as slings, chains, hooks and grabs, magnetic systems present major benefits to manufacturing, assembly and storage sites:-

Simple, easy use
ready to use in minutes, simple, safe operation.

Increased number of lifts per hour
simple on-off operation, engages the load in seconds.

Total safety....
incorporates numerous fail safe mechanisms.

Precision lifting
magnetic lifting systems provide a greater lift control.

Single person or automated use
complete safety, minimal training, labour efficient.

Zero running costs
permanent magnetic technology does not require a sustained power source.

Optimises storage space
floor space optimised as access only required to one lifting face.

No load damage
protects the product finish, ideal for painted or coated surfaces.

MONTFORT INTERNATIONAL ltd
2500 avenue Watt, Québec (QUÉBEC) Canada G1P 3T3
+ 1 (418) 877-0778 - (800) 463-6668 - info@montfort-international.com

Total Safety – the safest way to lift ferrous loads

Operation safety is the foremost consideration in the design of all our magnetic lifting and handling systems. Permanent magnetic technology with built in fail-safe mechanisms and a 3:1 lift safety factor (Battery lifter 2:1) ensures complete safety for all operations.

All our products comply with HSE regulations and guidelines such as the Lifting Operations and Lifting Equipment Regulations 1998 (LOLER) and the Provision and Use of Work Equipment Regulations 1998 (PUWER) (UK Regulations).

Our permanent lifters are also designed in accordance with ASME BS30.20-2010.

Magnetic lifting and handling

Optimising process efficiency in diverse applications

Raw materials

Our lifting and handling systems are widely used for handling raw materials in primary production stages, such as:-

- Steel stockholders
- Steel production
- Steel fabrication shops
- Forgings and castings
- Tin products
- Coil handling
- Slab and plate transfer
- Profile picking

Manufacturing

Maximum efficiency combined with total safety are key requirements for demanding manufacturing applications. Our products are widely used in:-

- Yellow goods manufacture
- Feed conveyors
- Digger blades
- Assembly lines
- Machine shops
- Mould making
- Bearing manufacture
- Canned food lines
- Paint cans
- Jar handling systems
- Tin can manufacture
- Turbo manufacture
- Springs
- Brake manufacture
- Engine block manufacture

Automation

Speed and precision accuracy, for single or multi-part loads, are key reasons why our systems are widely used in automation applications such as:-

- Transfer lines
- Conveyor lines
- Pick and place equipment
- General engineering
- Robotics
- Packaging machinery
- Palletising/depalletising systems

MONTFORT INTERNATIONAL ltd
2500 avenue Watt, Québec (QUÉBEC) Canada G1P 3T3
+ 1 (418) 877-0778 - (800) 463-6668 - info@montfort-international.com

Give your business the edge.....

A few of our many satisfied customers...

Tyzak

Machine Blades

Product: Manually Switched Permanent Magnet (MSPM)

The company manufacture shearing machine blades from raw black steel stock, the finished product is heat treated and has a ground finish.

Using traditional lifting systems, such as chains and slings, the size and profile of the parts were difficult to handle without marking the surface and edges of the load.

Eclipse Ultralift LM was specified to use at each stage of the process. This has resulted in faster more efficient lifting and now minimal damage occurs to the load during lifting.

JCB

Construction Equipment

Products: Electronically Switched Permanent Magnet (ESPM)

This world renowned construction equipment OEM use ESPMs in many areas of production for clamping and transferring parts.

The ESPMs are used in process stages such as robotic pick and place of hydraulic cylinders and rams. They are used to feed and unload equipment during the manufacturing process. In addition they are used as a means of holding digger arms prior to tag welding.

Simple, fast loading and single surface contact have made a significant contribution to process efficiency.

FG Wilson

Generator Manufacture

Products: Pneumatically Switched Permanent Magnet (PSPM)

This company manufacture large gas and diesel generators. Optimag P's were specified for lifting steel sheet which is used in the manufacture of enclosures for the generators.

The Optimags are mounted on a lifting frame. Optimag was the ideal solution for lifting single sheets of 3mm steel. With single face contact and instant clamping to the load, the Optimags improved lifting speeds and efficiency.

Leyland DAF

Automotive

Products: Customised Magnetic Lifter

Leyland DAF move thousands of truck components each week around their production and assembly site. It is vital that they have the most efficient, trouble free lifting systems.

Moving leaf springs into position to mount onto axle sub-assemblies was previously a manual process which involved several operatives. Introducing an Optimag P increased speed of the lift and reduced the operation to a single person task.

The spring manufacturer subsequently adopted the same method on their manufacturing line.

Optimum Lifting & Handling Solutions

Important considerations when choosing a lifter

Permanent Lifters

Manually Switchable Permanent Magnet (MSPM)

Optimag E

Electronically Switchable Permanent Magnet (ESPM)

Optimag P

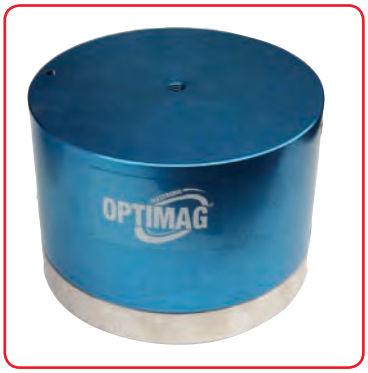

Pneumatically Switchable Permanent Magnet (PSPM)

Product Selector

Product Type	Page	Material shape		Recommended material thickness mm					Surface fin	
		Flat	Round	1-4	5 - 8	8 - 12	12 - 20	20 +	Bright	Black
LM Lifters	11	✔	✔				✔	✔	✔	✔
UL+ Lifters	9	✔	✔				✔	✔	✔	✔
TP Lifters	12	✔			✔	✔	✔	✔	✔	✔
90 Degree Lifter	15	✔					✔	✔	✔	✔
Battery Lifters	16	✔	✔					✔	✔	✔
Optimag E	17	✔	✔			✔	✔	✔	✔	✔
Optimag P	18	✔		✔	✔	✔	✔	✔	✔	✔

Material Type

The scale opposite highlights the effect material type has on clamping forces.

Workpiece Material

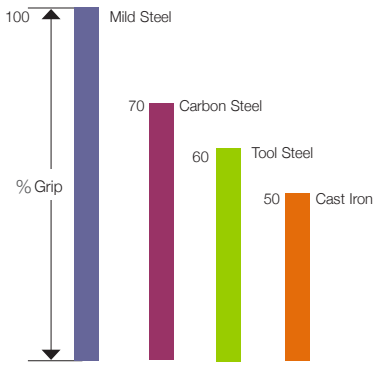

Material Thickness

To achieve maximum clamping force minimum materials should be observed.

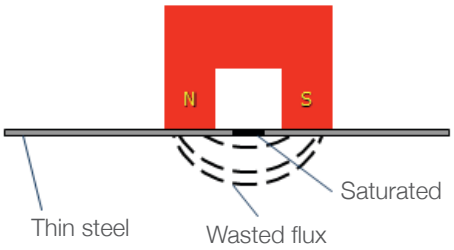

Minimum part thickness provides 100% performance

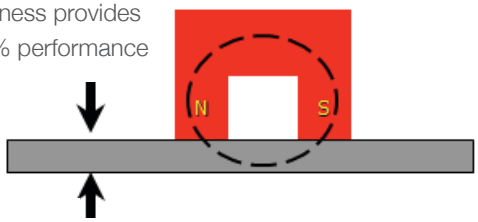

Closed Circuit
Maximum holding power

MONTFORT INTERNATIONAL ltd
2500 avenue Watt, Québec (QUÉBEC) Canada G1P 3T3
+ 1 (418) 877-0778 - (800) 463-6668 - info@montfort-international.com

ish	Actuation method		
Scaled	Manual	Electronically	Pneumatically
✔	✔		
✔	✔		
	✔		
	✔		
✔	✔		
		✔	
✔			✔

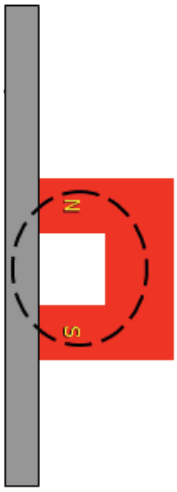

Please Note:- All specifications shown are based on a straight vertical lift. Should the load be rotated through 90º the safe working load will be reduced by 80% of the stated values.

Air Gaps

An air gap between the magnet and the load will also affect lifter performance. The chart below shows the effect on different materials.

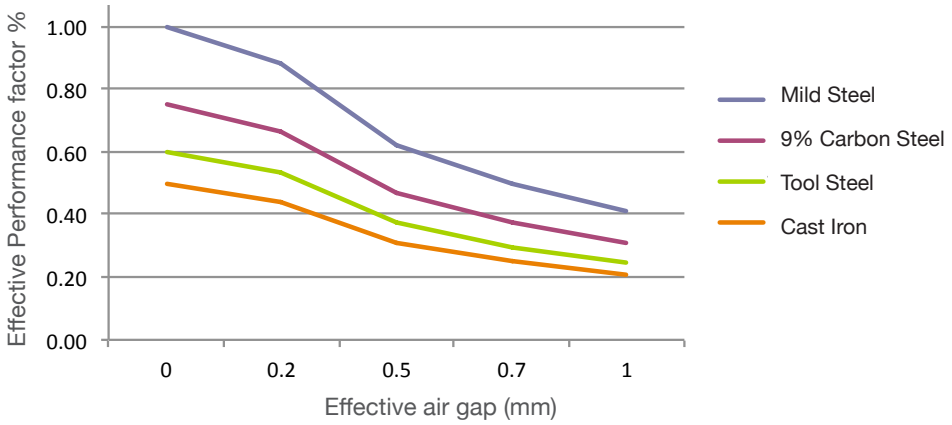

As the air gap increases the magnetic performance reduces.

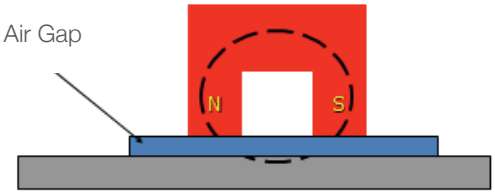

Semi - closed circuit
Reduced holding power

PATENTED

Ultralift Plus

The safest lift in the world

Premier Range

3 YEAR WARRANTY

MONTFORT INTERNATIONAL

- The premier manually switchable magnetic lifter (MSPM)
- Provides fast and efficient lifting
- A range of built in safety features
- Guaranteed 3:1 safety factor

Primary Safety

Lifting Eye – once the lifting eye is under tension with the load a patented mechanism locks the handle ensuring that the raised load cannot be released either deliberately or accidentally.

High performance - "Rare Earth' magnet material provides high performance.

No Running Costs - No power required - no additional costs.

Space Saving - Access only required to the load's top face allowing more efficient use of storage and handling areas.

Primary Safety

Safety Shim – Ultralift Plus is the only permanent magnetic lifter to be supplied with a "safety shim" (internationally patented). This allows pre-testing of the load, irrespective of weight, material type, material thickness and surface condition. If it can be lifted with the safety shim in place, a 3:1 safety factor is guaranteed. This is ideal where the load, weight and size may vary.

Technical Data

Product	Unit Weight	Max Length of load	Flat Section SWL *	Flat Section Thickness Min.	Round Section SWL	Round Section Diameter Max.	Dimensions mm A	B	C	D	E
	kg	mm	kg	mm	kg	mm					
UL0125+	4	1500	125	20	50	200	152	64	74	69	101
UL0250+	11	1500	250	25	100	300	218	94	96	92	155
UL0500+	27	1500	500	30	200	400	266	123	128	122	224
UL1000+	63	1500	1000	45	400	450	391	140	174	176	260
UL2000+	157	2000	2000	70	800	600	493	195	227	233	368

* Safe working load

MONTFORT INTERNATIONAL ltd
2500 avenue Watt, Québec (QUÉBEC) Canada G1P 3T3
+ 1 (418) 877-0778 - (800) 463-6668 - info@montfort-international.com

ECLIPSE MAGNETICS

Handle - After releasing the safety mechanisms, the magnet can be released easily, by using one hand.

Secondary Safety

Safety button - A safety catch locks the handle in the "on" position. This prevents any accidental release of the load once engaged.

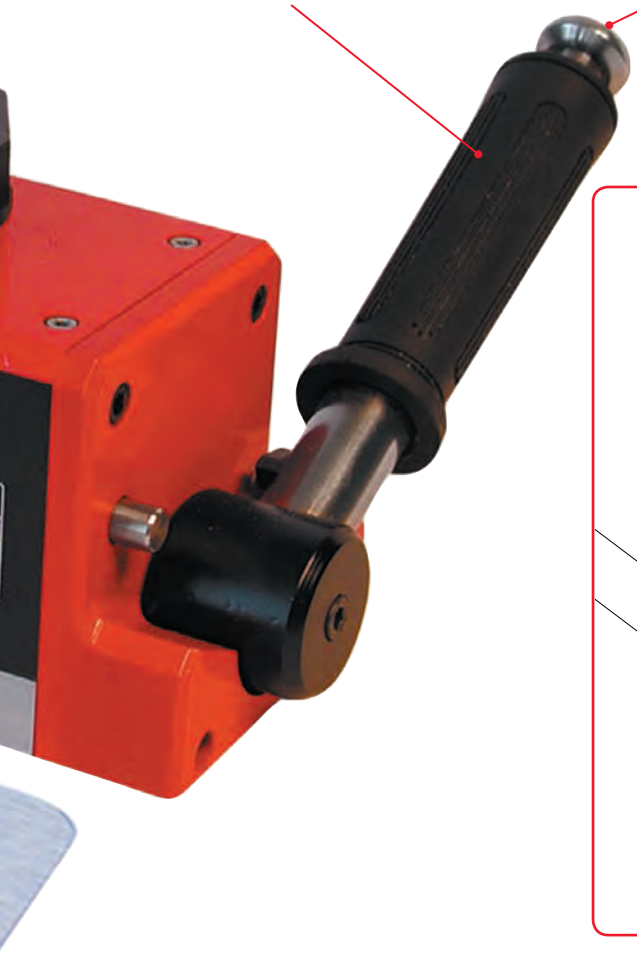

How it works

Manually rotating the handle changes the direction of the magnetic flux, thereby switching from on to off.

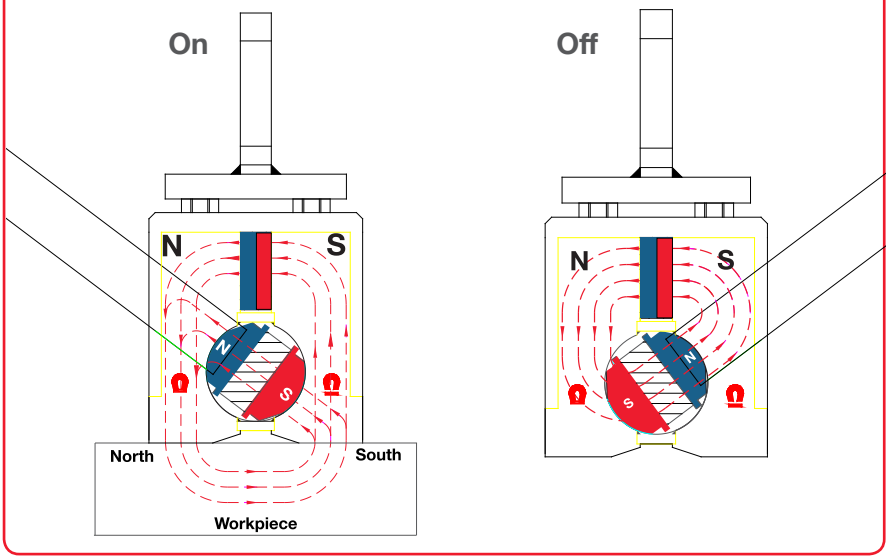

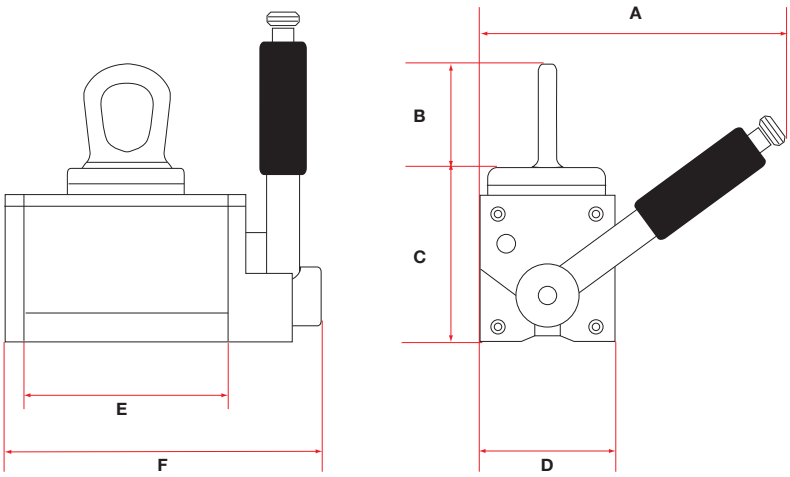

F
155
214
300
359
477

Ultralift LM

Economy Range

Safe, efficient, general purpose permanent magnetic lifter

- Standard manually switchable permanent magnetic (MSPM) lifter option
- Provides fast and efficient lifting
- Safety locking mechanism prevents accidental release of load

Technical Data

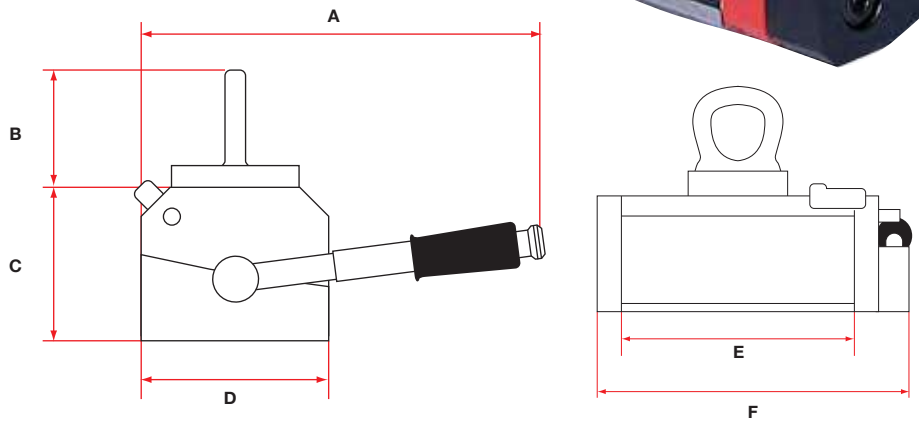

Product	Unit Weight	Max. Length of load	Flat Section SWL*	Flat Section Thickness Min.	Round Section SWL*	Round Section Diameter Max.	Dimensions mm					
	kg	mm	kg	mm	kg	mm	A	B	C	D	E	F
LM0125	4.5	1500	125	20	50	250	150	54	62	76	110	150
LM0250	8.5	1500	250	25	100	300	210	76	72	90	165	200
LM0500	17.5	1500	500	30	200	400	281	103	88	106	225	243
LM1000	36.5	1500	1000	45	400	450	391	113	103	136	325	365
LM2000	79	2000	2000	70	800	600	483	170	132	186	400	526

*Safe working load

MONTFORT INTERNATIONAL ltd
2500 avenue Watt, Québec (QUÉBEC) Canada G1P 3T3
+ 1 (418) 877-0778 - (800) 463-6668 - info@montfort-international.com

Ultralift TP

The thin plate specialist

- Permanent magnetic lifter for the safe lifting of thin plate and pressings.
- Guaranteed lifting of single plates
- Simple, quick operation

How it works

Manually rotating the handle changes the direction of the magnetic flux, thereby switching from on to off.

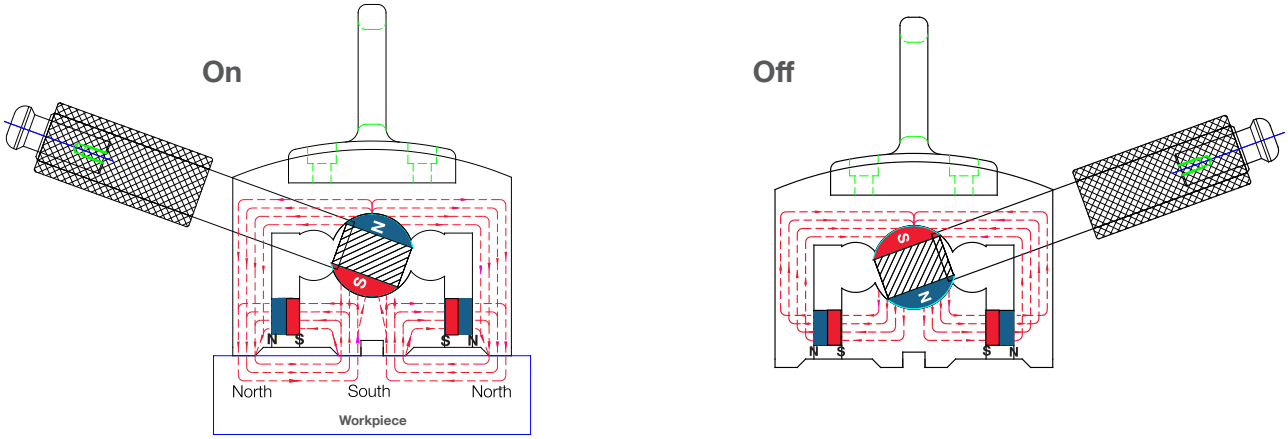

Technical Data

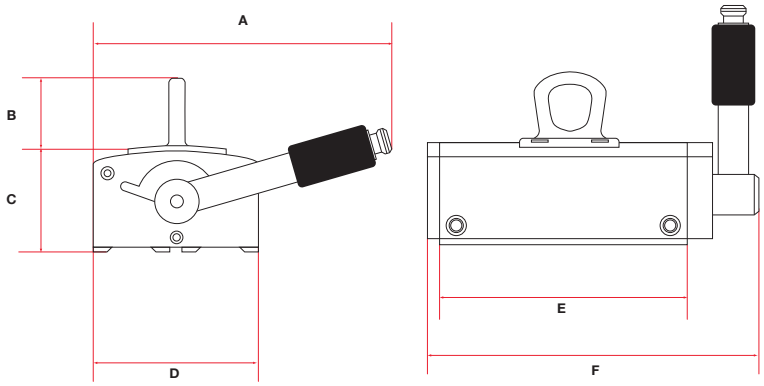

Product	Unit Weight	Material Thickness 5mm SWL	5mm Length Max.	6mm SWL	6mm Length Max.	8mm SWL	8mm Length Max.	10mm SWL	10mm Length Max.	Dimensions mm A	B	C	D	E	F
	kg	kg	mm	kg	mm	kg	mm	kg	mm						
TP150	8	75	1500	100	1500	150	1500	200	1500	181	52	74	100	150	202
TP300	15	150	2000	200	2000	300	2000	400	2000	181	52	74	100	300	352

MONTFORT INTERNATIONAL ltd
2500 avenue Watt, Québec (QUÉBEC) Canada G1P 3T3
+ 1 (418) 877-0778 - (800) 463-6668 - info@montfort-international.com

Choosing a Manually Switchable Permanent Magnetic lifter (MSPM)

Use the tables below to determine safe working loads and load dimensions for each lifter option.

Flat parts

Product	SWL* Flat kg	Max Length (X) mm	Material Thickness (T) mm										Max width (Y) (At material thicknesses shown above).
			10	15	20	25	30	45	60	70	80	100	
Ultralift Plus													
UL0125+	125	1500	490	530	540	430	350	240	180	152	135	108	
UL0250+	250	1500	688	791	820	860	700	480	360	305	270	216	
UL0500+	500	1500	700	980	1260	1330	1400	960	720	610	540	432	
UL1000+	1000	1500	X	600	755	910	1200	1500	1440	1220	1080	864	
UL2000+	2000	2000	X	X	X	X	700	1290	1750	1850	1610	1290	
Ultralift LM													
LM0125	125	1500	490	530	540	430	350	240	180	152	135	108	
LM0250	250	1500	688	791	820	860	700	480	360	305	270	216	
LM0500	500	1500	700	980	1260	1330	1400	960	720	610	540	432	
LM1000	1000	1500	X	600	755	910	1200	1500	1440	1220	1080	864	
LM2000	2000	2000	X	X	X	X	700	1290	1750	1850	1610	1290	

Product	SWL* Flat kg	Max Length (X) mm	Material Thickness (T) mm									Max width (Y)
			5	6	7	8	9	10	15	20	25	
Ultralift TP												
TP150	200	1500	1300	1440	1500	1500	1500	1500	1150	860	680	
TP300	400	2000	2000	2000	2000	2000	2000	2000	1720	1290	1030	

Round parts

Product	SWL Round* kg	Diameter (D) mm								Max width (Y) (At material thicknesses shown above).
		50	100	200	300	400	450	500	600	
Ultralift Plus										
UL0125+	50	1600	820	200	X	X	X	X	X	
UL0250+	100	3500	1640	400	180	X	X	X	X	
UL0500+	200	3500	3280	800	360	210	X	X	X	
UL1000+	400	X	4000	1600	720	420	308	X	X	
UL2000+	800	X	X	3200	1480	840	616	370	X	
Ultralift LM										
LM0125	50	1600	820	200	X	X	X	X	X	
LM0250	100	3500	1640	400	180	X	X	X	X	
LM0500	200	3500	3280	800	360	210	X	X	X	
LM1000	400	X	4000	1600	720	420	308	X	X	
LM2000	800	X	X	3200	1480	840	616	370	X	

Recommended use shown in WHITE.

RED shows typical reduction in load due to thickness of material. X - Cannot be used for stated dimensions.

* Based on mild steel and bright finish.

This chart is to assist but once material thickness is identified maximum length can be shorter and width can be greater providing total area remains the same per magnet. Once length / width (total area) exceeds the recommended dimensions for the thickness, additional magnets should be used. (See over page). Number of magnets will continue to increase pro rata to plate size. Always position magnets to suit thickest material.

MONTFORT INTERNATIONAL ltd
2500 avenue Watt, Québec (QUÉBEC) Canada G1P 3T3
+ 1 (418) 877-0778 - (800) 463-6668 - info@montfort-international.com

Do's and Don'ts

Positioning the lifter

Component wider than the length of the magnet

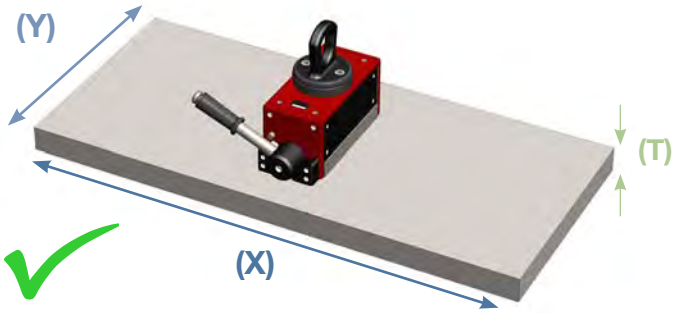

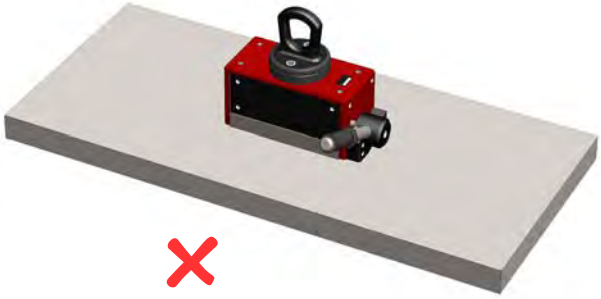

Magnet across increases clamping at possible point of peel.

Component width less than the magnet length

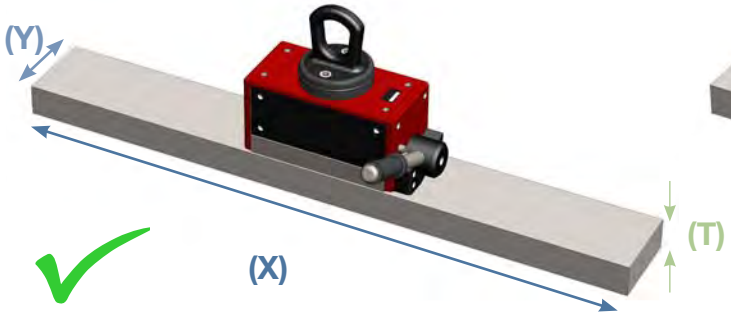

Parts longer than maximum recommended length

Once Max length or Max SWL is reached multiple magnets must be used. Ideal positioning shown. **(Fig 1)**

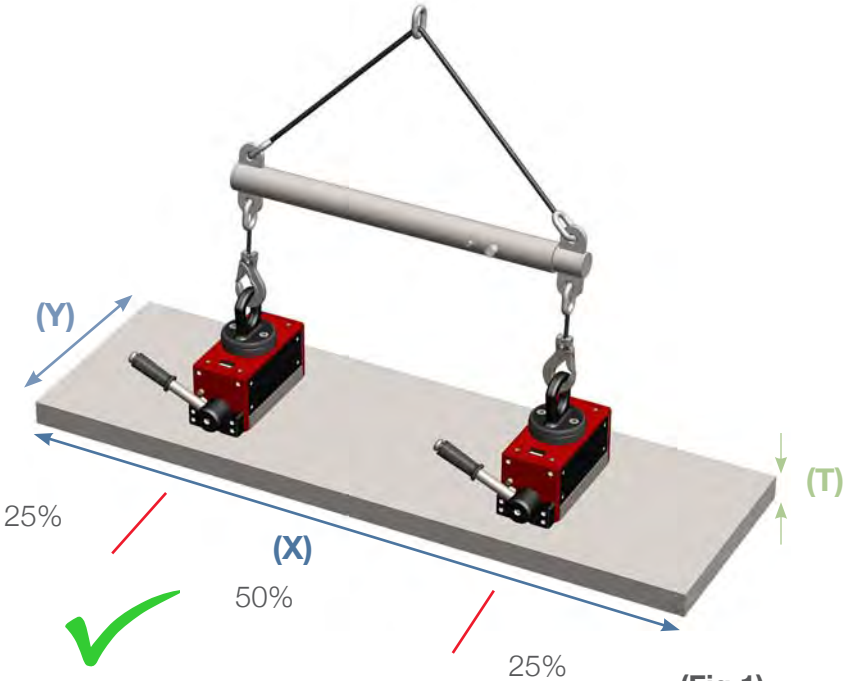

(Fig 1)

90° Disc and Plate Lifter

- Cost effective lifting frame with permanent lifting magnet.
- Ideal for lifting and rotating steel discs and plates in positioning and machine loading applications.
- Full adjustment and built in safety features.

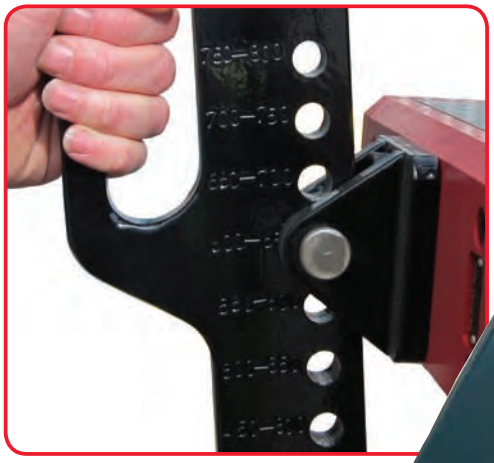

How it works

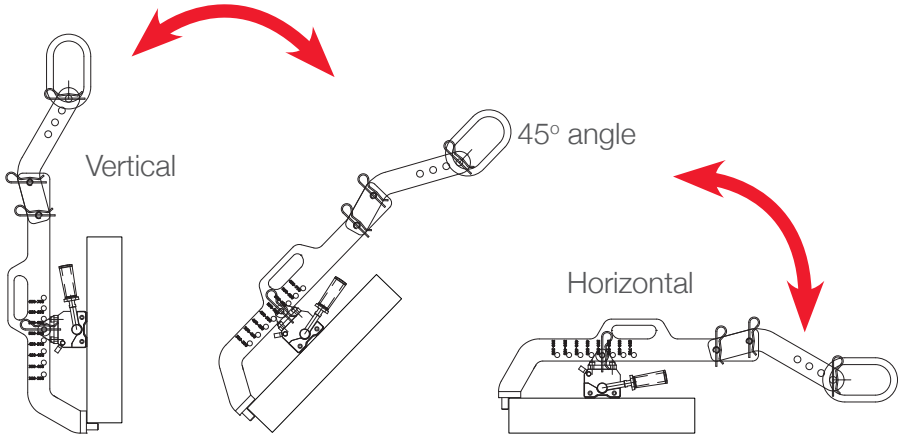

Technical Data

Product	SWL kg	Load thickness Min. mm	Load thickness Max. mm	Load Diameter Min. mm	Load Diameter Max. mm
LF125	125	20	55	250	600
LF250	250	30	80	300	700
LF500	500	40	125	350	800
LF1000	1000	50	160	500	1000

90° lifter can lift round and rectangular items.

MONTFORT INTERNATIONAL ltd
2500 avenue Watt, Québec (QUÉBEC) Canada G1P 3T3
+ 1 (418) 877-0778 - (800) 463-6668 - info@montfort-international.com

Battery Activated Magnetic Lifter

- Battery only required to energise magnets
- Permanent magnets ensure failsafe operation
- 2:1 lift safety factor guaranteed
- Push button operation
- Optional remote control
- Built in safety mechanisms such as lifting eye sensor

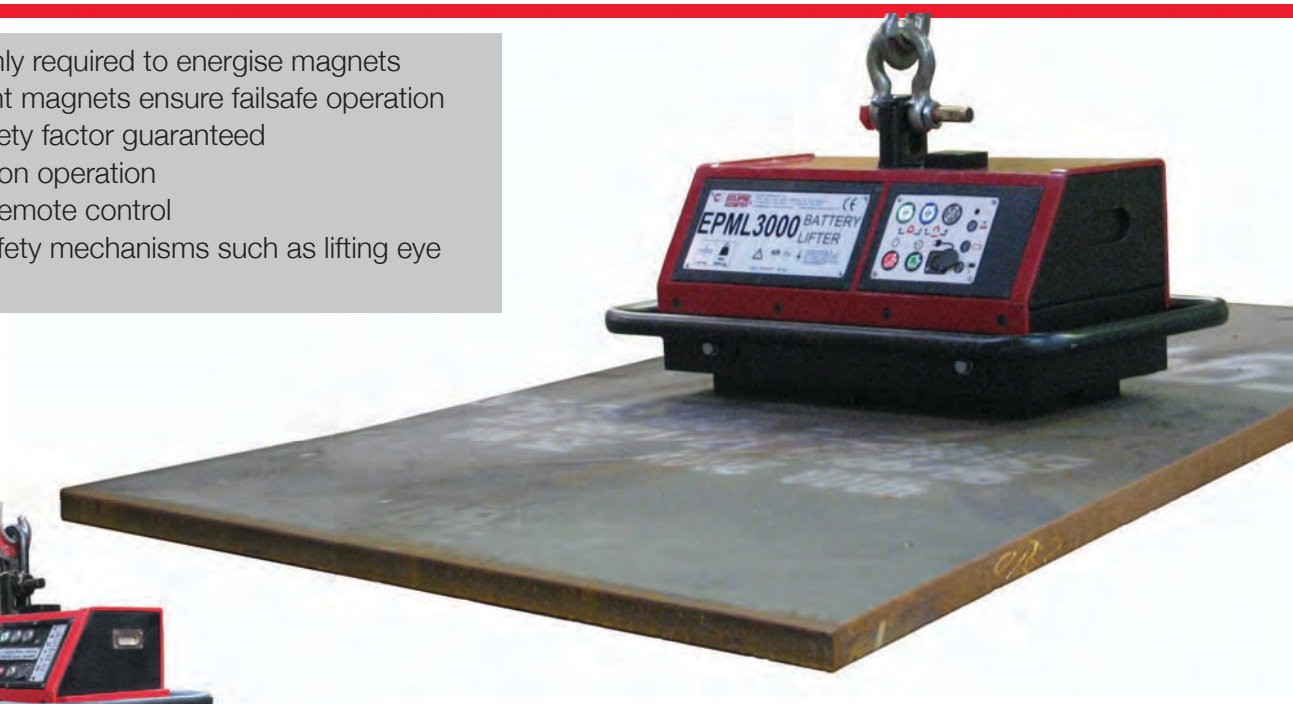

Re-chargeable batteries

- Lifter has built in socket for charging the battery on site

Technical Data

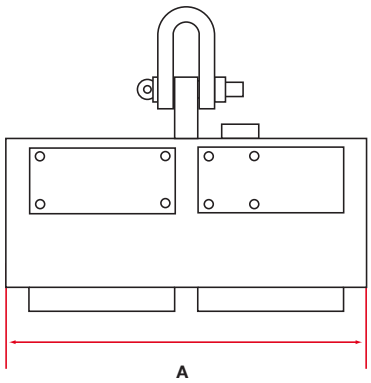

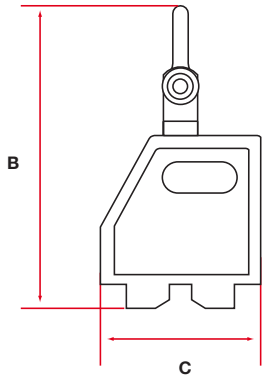

Product	Load profile	Unit Weight	SWL	Diameter Min.	Diameter Max.	Dimensions mm		
		kg	kg	mm	mm	A	B	C
EPML1250R	Round	175	1250	200	400	690	530	280
EPML3000	Flat	164	3000	N/A	N/A	690	530	280

MONTFORT INTERNATIONAL ltd
2500 avenue Watt, Québec (QUÉBEC) Canada G1P 3T3
+ 1 (418) 877-0778 - (800) 463-6668 - info@montfort-international.com

PATENTED

Optimag E

Electronically switchable permanent magnets (ESPM)

- Ideal for clamping or lifting loads with clean, even, flat surfaces
- Suitable for applications which require sensing or built-in PLC control
- Failsafe operation - lose power it will retain the hold
- Ideal for materials from 10mm thick

How it works

A single pulse of power switches the magnet by reversing the magnetic poles and in doing so changes the magnetic flux direction to hold or release the load. Magnetism is channelled to provide a deeper magnetic field making it ideal for thicker materials

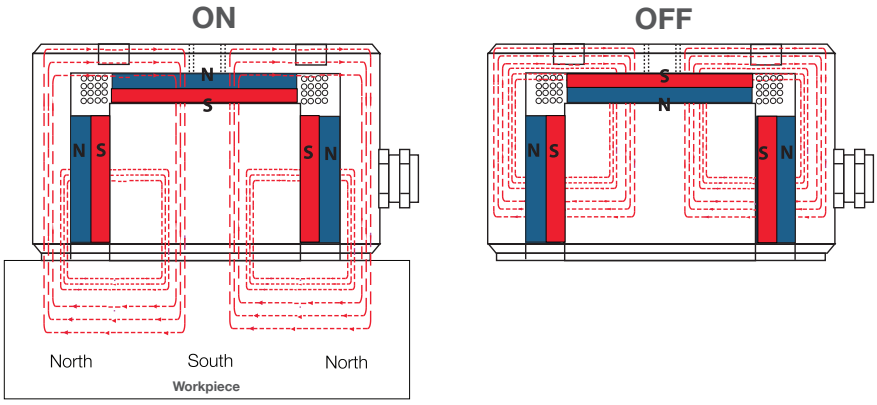

Technical Data

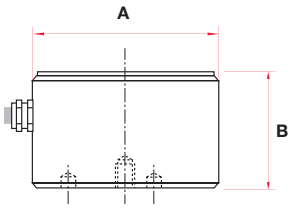

Circular Optimag E

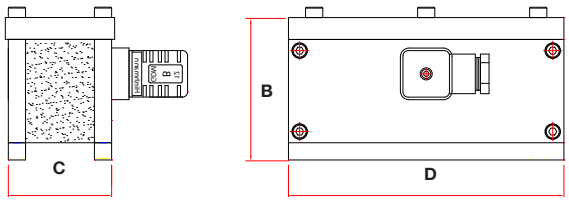

Rectangular Optimag E

ESPM Controller

Product	Lifting	SWL	Dimensions mm				Unit Weight
	mm	kg	A	B	C	D	kg
Circular							
Optimag 80E	Flat	85	80	55	N/A	N/A	1.8
Optimag 100E	Flat	150	105	62	N/A	N/A	3
Optimag 125E	Flat	250	130	80	N/A	N/A	6
Optimag 150E	Flat	400	155	80	N/A	N/A	8.8
Rectangular							
Optimag E164RF	Flat	42	N/A	83	40	160	2.8
Optimag E166RF	Flat	84	N/A	83	60	160	3.8
Optimag E177RF	Flat	234	N/A	130	74	170	10.4
Optimag E164RR	Round	37	N/A	83	40	160	2.9
Optimag E166RR	Round	75	N/A	83	60	160	4
Optimag E177RR	Round	234	N/A	135	74	170	10.6

Controllers	Operating Voltage	Rating	Dimensions mm		
	V		Width	Height	Depth
Optimag EC1	240	50	300	300	155
Optimag EC2	240	100	300	300	155
Optimag EC3	240	180	400	300	155
Optimag EC1/2 Handset	N/A	N/A	112	65	55
Optimag EC3 Handset	N/A	N/A	112	65	55

MONTFORT INTERNATIONAL ltd
2500 avenue Watt, Québec (QUÉBEC) Canada G1P 3T3
+ 1 (418) 877-0778 - (800) 463-6668 - info@montfort-international.com

PATENTED

Optimag P

Pneumatically switchable permanent magnets (PSPM)

- Ideal for rigid, thin or perforated pressings or sheet
- Suitable for loads with rough, uneven or painted surfaces
- Failsafe operation - lose air clamping hold is retained
- Ideal for material thicknesses from 2mm thick

How it works

A pulse of air moves the magnet pack up and down thereby directing the magnetic flux into or away from the load. The air is required only for switching, a constant air source is not required during clamping.

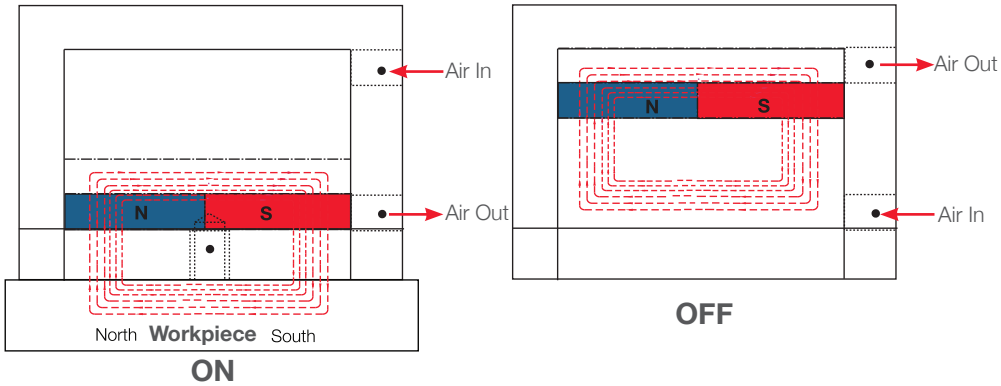

Technical Data

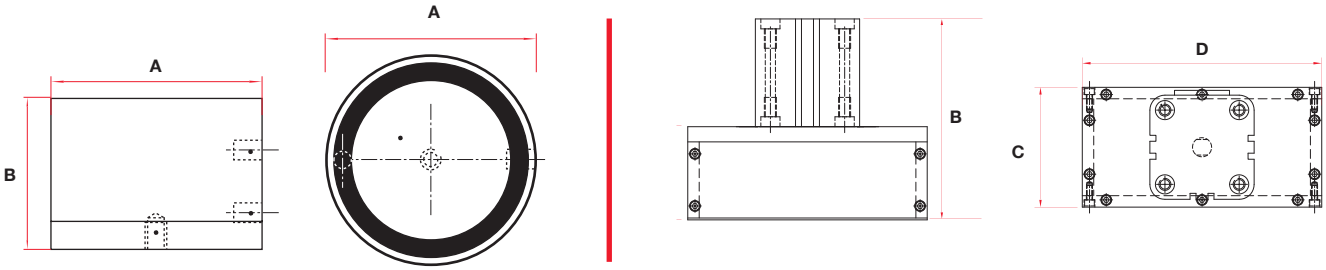

Product	Lifting	SWL	Dimensions mm				Unit Weight
	mm	kg	Diameter A	Height B	Width C	Length D	kg
Circular							
Optimag 100P	Flat	18.8	100	84	N/A	N/A	3
Optimag 125P	Flat	29	125	93	N/A	N/A	6
Optimag 150P	Flat	59	153	108	N/A	N/A	8.8
Rectangular							
Optimag 1020P	Flat	75	N/A	168	100	200	6
Optimag 2030P	Flat	100	N/A	180	300	200	12

Choosing the correct product (ESPM and PSPM)

Use the table below to determine which product is suitable for your load dimensions.

Optimag E

Product	Load Profile	Max. SWL kg	Rating	Max. length (X)	Material Thickness (T) mm								Max. width (Y) (At material thickness shown above).
					8	10	15	20	30	40	50	60	
Circular													
Optimag 80C	Flat	85	3.5	750	750	750	750	731	487	365	292	243	
Optimag 100C	Flat	150	5	1000	800	800	800	800	645	484	387	323	
Optimag 125C	Flat	250	9	1200	1200	1200	1200	1200	896	672	538	448	
Optimag 150C	Flat	400	12	1500	1500	1500	1500	1500	1147	1075	774	806	
Rectangular													
Optimag 164RF	Flat	42	6	600	600	600	600	452	301	226	180	150	
Optimag 166RF	Flat	84	11	800	800	800	800	677	452	339	271	226	
Optimag 177RF	Flat	234	10	1500	1500	1500	1342	1006	670	503	403	335	

Product	Load Profile	Max. SWL kg	Rating	Diameters (D) mm									Max. length (X)
				30	40	50	60	80	100	120	150	200	
Optimag 164RR	Round	37	6	1400	550	480	X	X	X	X	X	X	
Optimag 166RR	Round	75	11	1500	1500	1490	1190	650	390	X	X	X	
Optimag 177RR	Round	234	10	N/A	N/A	N/A	1500	1400	1200	1000	820	450	

Optimag P

Product	Load Profile	Max. SWL kg	Max. Length (X) mm	Material Thickness (T) mm						Max. width (Y) (At material thickness shown above).
				3	5	8	10	15	20	
Optimag100P	Flat	18.8	750	750	630	404	324	216	162	
Optimag125P	Flat	29	800	800	800	590	474	320	240	
Optimag150P	Flat	59	1000	1000	1000	952	761	507	381	
Optimag200P	Flat	106	1200	1200	1200	1200	1140	760	570	

Recommended use shown in WHITE.

RED shows typical reduction in load due to thickness of material. X - Cannot be used for stated dimensions.

All details above are based upon the mild steel bright finish, if material is different please refer to material and air gap information page.

The chart is to assist but once material thickness is identified maximum length can be shorter and width can be greater providing total area remains the same per magnet.

Once length / width (total area) exceeds the recommended dimensions for the thickness, additional magnets should be used. (See facing page).

Number of magnets will continue to increase pro-rata to plate size. Always position magnets to suit thickest material.

MONTFORT INTERNATIONAL ltd
2500 avenue Watt, Québec (QUÉBEC) Canada G1P 3T3
+ 1 (418) 877-0778 - (800) 463-6668 - info@montfort-international.com

Using multiple lifters

Positioning the ESPM or PSPM lifter

Once the load dimensions exceed the maximum stated, mulitple lifters must be used. Ideal positioning is shown below.

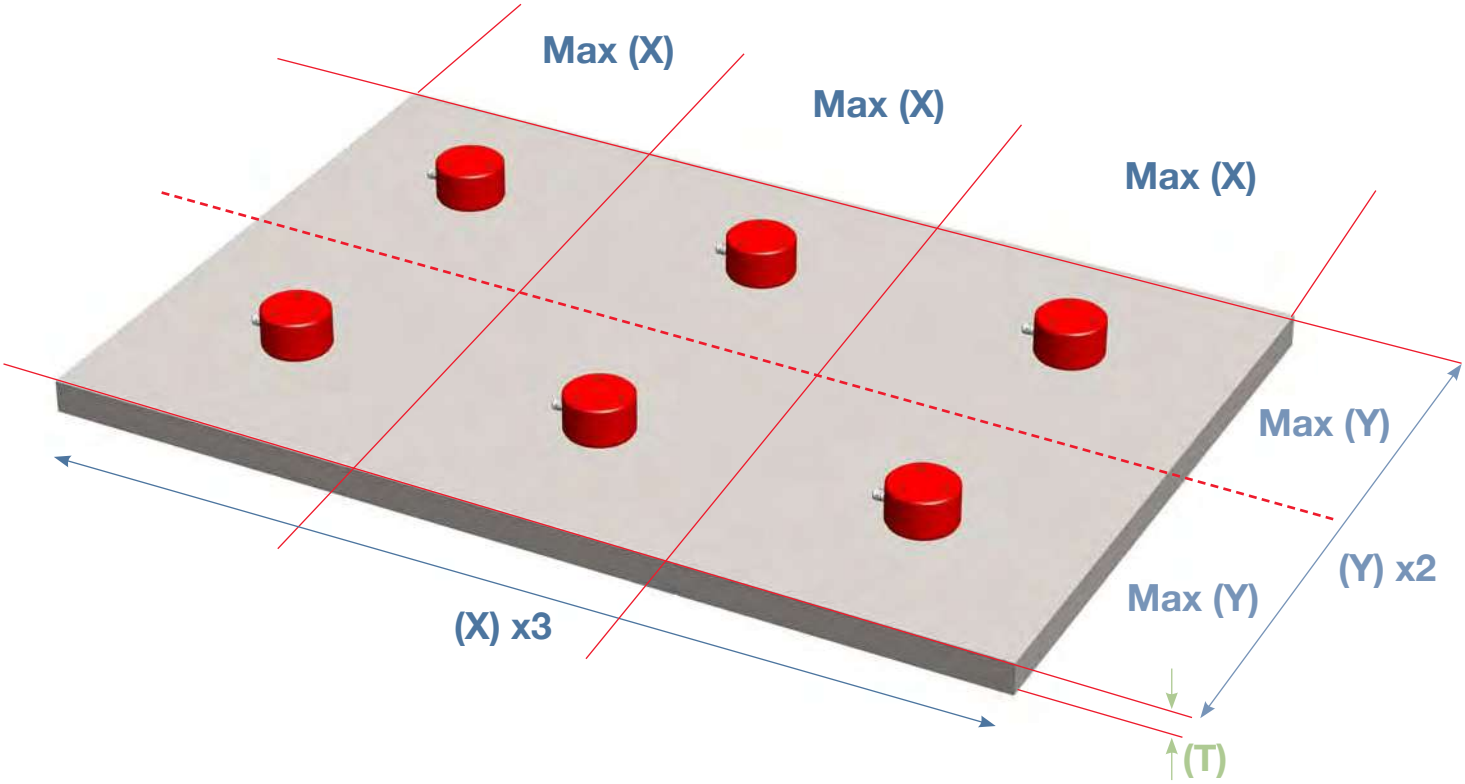

Optimag 166RR

Rectangular Optimag E is supplied for lifting flat and round material. These can be supplied with V pole extensions.

Handling Accessories

Sheet separators

- Safe, fast, efficient removal of single sheets of steel, or pressings from stacks.
- Prevents lifting of two sheets together.
- Range of options for most situations including switchable units designed for high speed / high volume production lines.
- Ideal for use with Eclipse Magnetics lifting magnets.

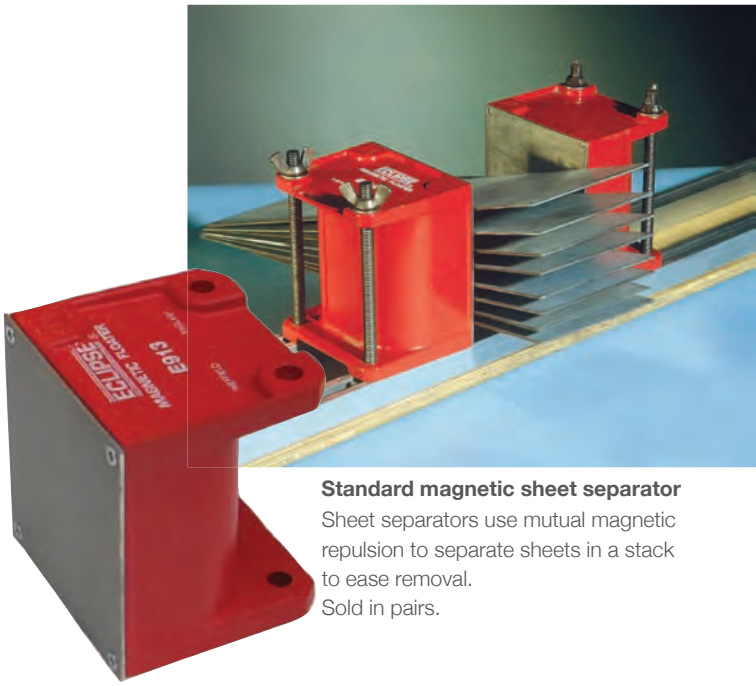

Standard magnetic sheet separator
Sheet separators use mutual magnetic repulsion to separate sheets in a stack to ease removal.
Sold in pairs.

Easily separates the top item from a stack of sheet steel or pressed products from the rest of the stack ready for automated or manual removal.

Typically separates material from **0.2mm to 3mm thick** but almost any shape or size can be accommodated by products in our range. Separation ability can be reduced if oil or treated oil is present on the sheets.

It's important to order the correct size of separator for the size of material to be separated. If the items are half the width of the separator the top items can flip onto the face of the separator instead of being separated.

Technical Data

Product	Width	Height	Depth	Mounting hole size	Weight per pair
	mm	mm	mm	mm	kg
E913	73	76	65	M8	1.40
E914	92	102	76	M8	3.10
E915	113	152	89	M10	6.75

Product	Magnetic material	Height mm
Ceramic		
SF100/C	Ceramic	100
SF200/C	Ceramic	200
SF300/C	Ceramic	300
SF400/C	Ceramic	400
SF500/C	Ceramic	500
Rare Earth		
SF100/R	Rare Earth	100
SF200/R	Rare Earth	200
SF300/R	Rare Earth	300
SF400/R	Rare Earth	400
SF500/R	Rare Earth	500

All above ranges are 100mm wide, 50mm thick

Industrial made to order magnetic sheet separator

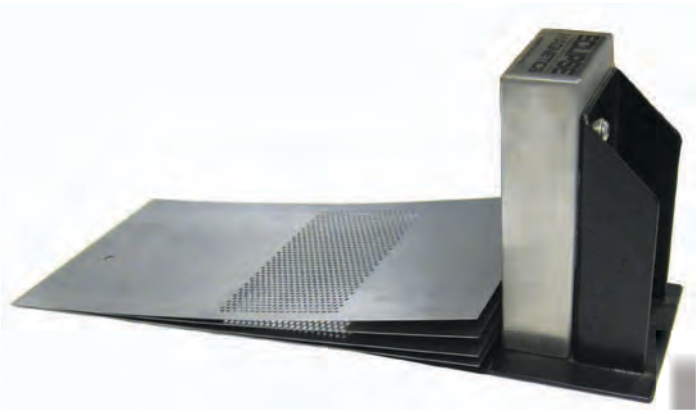

MONTFORT INTERNATIONAL ltd
2500 avenue Watt, Québec (QUÉBEC) Canada G1P 3T3
+ 1 (418) 877-0778 - (800) 463-6668 - info@montfort-international.com

Service and maintenance

Full inspection and certification

All lifting systems should be serviced every 6 months by a competent person. Our fully trained engineers provide a full inspection and certification service. (Please refer to local territory guidelines for inspection requirements).

Periodic inspection

If the lifting magnet is being used in the EU then it must be inspected and maintained in accordance with the requirements of PUWER (1998) (UK Regulations).

For areas outside the EU the lifter must be inspected and maintained in compliance with the applicable standards for suspended load handling.

Should the data plates become detached or damaged please contact your supplier immediately for replacement plates.

Other Products

In addition to our lifting and handling range, Eclipse Magnetics manufacture a wide range of high performance magnetic products for diverse applications.

Sub-micron filtration for industrial fluids

Workholding systems

Magnetic aids for workshop & general engineering applications

Magnetic materials & assemblies

Foreign body removal - separation & detection systems

Heating system filters

MONTFORT INTERNATIONAL

MONTFORT INTERNATIONAL ltd

2500 avenue Watt, Québec (QC) Canada G1P 3T3
+ 1 (418) 877-0778 - (800) 463-6668
info@montfort-international.com
www.montfort-international.com

Eclipse Magnetics Ltd
Atlas Way, Sheffield, S4 7QQ, England
T +44 (0)114 225 0600 **F** +44 (0)114 225 0525
info@eclipsemagnetics.com www.eclipsemagnetics.com